LOEWEN WINDOWS

SERIES 36 PICTURE/DIRECT SET STORMFORCE WINDOW (HVHZ) (IMPACT)

GENERAL NOTES:

1. THE PRODUCT SHOWN HEREIN IS DESIGNED AND MANUFACTURED TO COMPLY WITH THE CURRENT EDITION FLORIDA BUILDING CODE (FBC) **INCLUDING** HVHZ. ALL PRODUCTS UNDER THE SCOPE OF THIS DOCUMENT HAVE BEEN EVALUATED ACCORDING TO THE FOLLOWING:
   - AAMA/WDMA/CSA 101/I.S.2/A440-17
   - ASTM E283-19
   - ASTM E330-14(21)
   - ASTM E331-00(23)
   - ASTM E1886-19
   - ASTM E1996-20
   - TAS 201-94
   - TAS 202-94
   - TAS 203-94

2. ADEQUACY OF THE EXISTING STRUCTURAL CONCRETE/MASONRY, 2X STUD FRAMING AS A MAIN WIND FORCE RESISTING SYSTEM CAPABLE OF WITHSTANDING AND TRANSFERRING APPLIED PRODUCT LOADS TO THE FOUNDATION IS THE RESPONSIBILITY OF THE ENGINEER OR ARCHITECT OF RECORD FOR THE PROJECT OF INSTALLATION.

3. 1X AND 2X BUCKS (WHEN USED) SHALL BE DESIGNED AND ANCHORED TO PROPERLY TRANSFER ALL LOADS TO THE STRUCTURE. BUCK DESIGN AND INSTALLATION IS THE RESPONSIBILITY OF THE ENGINEER OR ARCHITECT OF RECORD FOR THE PROJECT OF INSTALLATION.

4. THE INSTALLATION DETAILS DESCRIBED HEREIN ARE GENERIC AND MAY NOT REFLECT ACTUAL CONDITIONS FOR A SPECIFIC SITE. IF SITE CONDITIONS CAUSE INSTALLATION TO DEVIATE FROM THE REQUIREMENTS DETAILED HEREIN, A LICENSED ENGINEER OR ARCHITECT SHALL PREPARE SITE SPECIFIC DOCUMENTS FOR USE WITH THIS DOCUMENT.

5. APPROVED IMPACT PROTECTIVE SYSTEM **IS NOT REQUIRED** TO PROTECT THIS PRODUCT IN AREAS REQUIRING IMPACT RESISTANCE.

6. FRAME MATERIAL: DOUGLAS FIR OR STRONGER.

7. CLADDING & BEAD MATERIAL: ALUMINUM 6063-T5.

8. ALL STRUCTURAL MATERIALS & DISSIMILAR METALS SHALL BE PROTECTED, TREATED, PAINTED, COATED, AND/OR ISOLATED AS REQUIRED IN THE APPLICABLE SECTIONS OF THE CURRENT FLORIDA BUILDING CODE AND REFERENCED DESIGN SPECIFICATIONS.

9. GLASS MEETS THE REQUIREMENTS OF ASTM E 1300 GLASS CHARTS. SEE SHEET 2 FOR GLAZING DETAILS.

TABLE OF CONTENTS

SHEET	SHEET DESCRIPTION
1	GENERAL NOTES AND DESIGN RATINGS
2	GLAZING DETAILS
3	TYPICAL ELEVATION AND ANCHOR LAYOUTS
4	DESIGN PRESSURE CHARTS
5	VERTICAL SECTIONS
6	HORIZONTAL SECTIONS
7	INSTALLATION DETAILS AND NOTES

DESIGN RATINGS

FRAME SIZE	DESIGN PRESSURE	MISSILE RATING
SEE SHEETS 3 & 4		LARGE AND SMALL MISSILE IMPACT

LOEWEN WINDOWS
77 HWY 52 WEST
STEINBACH, MB R5G 1B2, CANADA
PH: (800) 563-9360

TITLE: SERIES 36 PICTURE/DIRECT SET STORMFORCE WINDOW (HVHZ) (IMPACT) GENERAL NOTES AND DESIGN RATINGS

PREPARED BY: BUILDING DROPS, INC.
1900 NE MIAMI COURT, SUITE 2-15
MIAMI, FL 33132
PH: (954) 399-8478
FAX: (954) 744-4738
WEB: www.buildingdrops.com

REMARKS	BY	DATE
A. GLASS REVISION	LS	3/31/2026
B. 2026 FBC UPDATE	LS	6/29/2026

THE INSTALLATION DETAILS DESCRIBED HEREIN ARE GENERIC AND MAY NOT REFLECT ACTUAL CONDITIONS FOR A SPECIFIC SITE. IF SITE CONDITIONS CAUSE INSTALLATION TO DEVIATE FROM THE REQUIREMENTS DETAILED HEREIN, A LICENSED ENGINEER OR ARCHITECT SHALL PREPARE SITE SPECIFIC DOCUMENTS FOR USE WITH THIS DOCUMENT.

Digitally signed by Hermes F. Norero, P.E.
Reason: I am approving this document
Date: 2026.08.11 16:18:50 +02'00'

HERMES F. NORERO LICENSE No. 73778 STATE OF FLORIDA PROFESSIONAL ENGINEER

HERMES F. NORERO, P.E.
FLORIDA P.E. No 73778
BUILDING DROPS, INC
1900 NE MIAMI COURT, SUITE 2-15
MIAMI, FL 33132
FBPE CERT. OF AUTHORIZATION No. 29578

FL #: FL30504

DATE: 11.21.2025

DWG. BY: MS | CHK. BY: HFN

SCALE: NTS

DWG. #: LOE001

SHEET: 1 OF 7 | REV. B

7/23/2026 1:54 PM
c:\users\lucianosanchez\building drops, inc\building drops landing - documents\common\projects\2026 code change projects\loewen\cc-26-0305.1 - 2026 code change - 1711\dwgs\fl30504\loe001-a.dwg

7/23/2026 1:54 PM
c:\users\lucianosanchez\building drops, inc\building drops landing - documents\common\projects\2026 code change projects\loewen\cc-26-0305.1 - 2026 code change - 1711\dwgs\fl30504\loe001-a.dwg

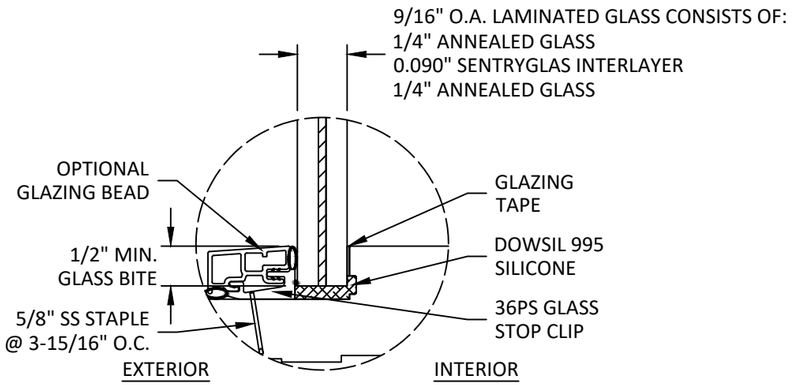

GLAZING DETAIL G1

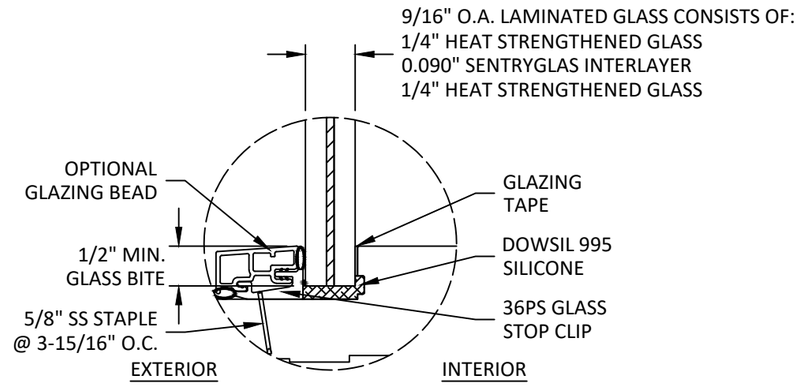

GLAZING DETAIL G2

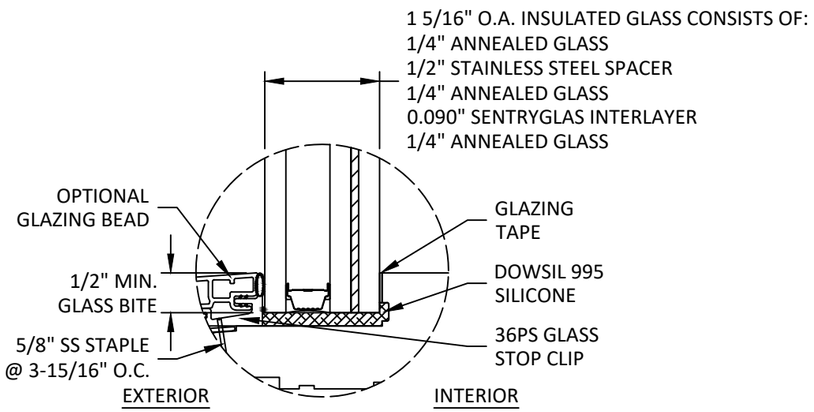

GLAZING DETAIL G3

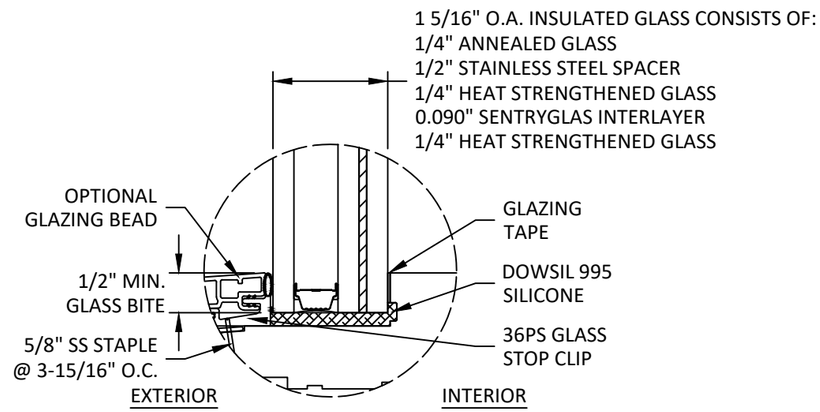

GLAZING DETAIL G4

GLAZING NOTES:

1. GLASS TYPES & THICKNESS COMPLY WITH ASTM E1300 REQUIREMENTS AS WELL AS APPLICABLE SAFETY GLAZING REQUIREMENTS PER THE FBC. TEMPER AND SAFETY GLAZING REQUIREMENTS SHALL BE REVIEWED ON A SITE SPECIFIC BASIS.
2. SETTING BLOCK DUROMETER HARDNESS OF 70-90 (SHORE A) AS REFERENCED IN FBC CHAPTER 24.
3. SETTING BLOCKS TO BE LOCATED AT 1/4 SPAN LENGTH FOR GLASS WIDER THAN 36" AS PER FBC CHAPTER 24.
4. D.L.O. AND DESIGN PRESSURES MAY NOT EXCEED MAX VALUES IN SHEET 2.

LOEWEN WINDOWS
77 HWY 52 WEST
STEINBACH, MB R5G 1B2, CANADA
PH: (800) 563-9360

TITLE: SERIES 36 PICTURE/DIRECT SET STORMFORCE WINDOW (HVHZ) (IMPACT) GLAZING DETAILS

PREPARED BY: BUILDING DROPS, INC.
1900 NE MIAMI COURT, SUITE 2-15
MIAMI, FL 33132
PH: (954) 399-8478
FAX: (954) 744-4738
WEB: www.buildingdrops.com

REMARKS	BY	DATE
A. GLASS REVISION	LS	3/31/2026
B. 2026 FBC UPDATE	LS	6/29/2026

THE INSTALLATION DETAILS DESCRIBED HEREIN ARE GENERIC AND MAY NOT REFLECT ACTUAL CONDITIONS FOR A SPECIFIC SITE. IF SITE CONDITIONS CAUSE INSTALLATION TO DEVIATE FROM THE REQUIREMENTS DETAILED HEREIN, A LICENSED ENGINEER OR ARCHITECT SHALL PREPARE SITE SPECIFIC DOCUMENTS FOR USE WITH THIS DOCUMENT.

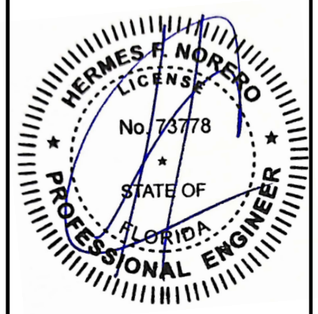

HERMES F. NORERO, P.E.
FLORIDA P.E. No 73778
BUILDING DROPS, INC
1900 NE MIAMI COURT, SUITE 2-15
MIAMI, FL 33132
FBPE CERT. OF AUTHORIZATION No. 29578

FL #: FL30504

DATE: 11.21.2025

DWG. BY: MS

CHK. BY: HFN

SCALE: NTS

DWG. #: LOE001

SHEET: 2 OF 7

REV. B

7/23/2026 1:54 PM
c:\users\lucianosanchez\building drops, inc\building drops landing - documents\common\projects\2026 code change projects\loewen\cc-26-0305.1 - 2026 code change - 1711\dwgs\fl30504\loe001-a.dwg

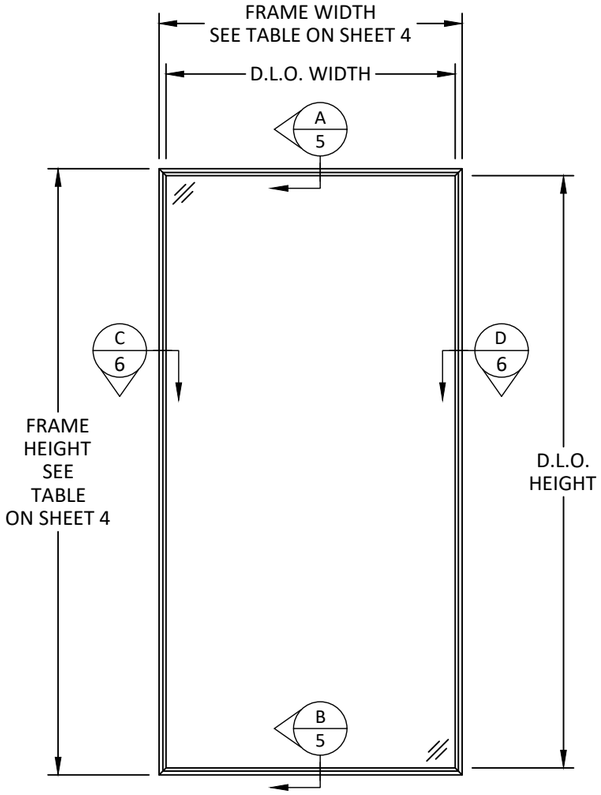

TYPICAL ELEVATION

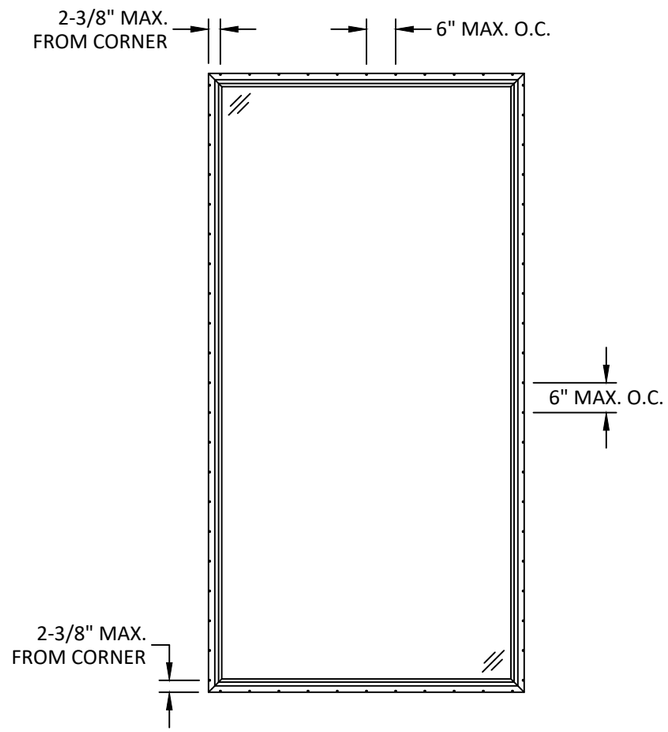

ANCHOR LAYOUT
NAILING FLANGE

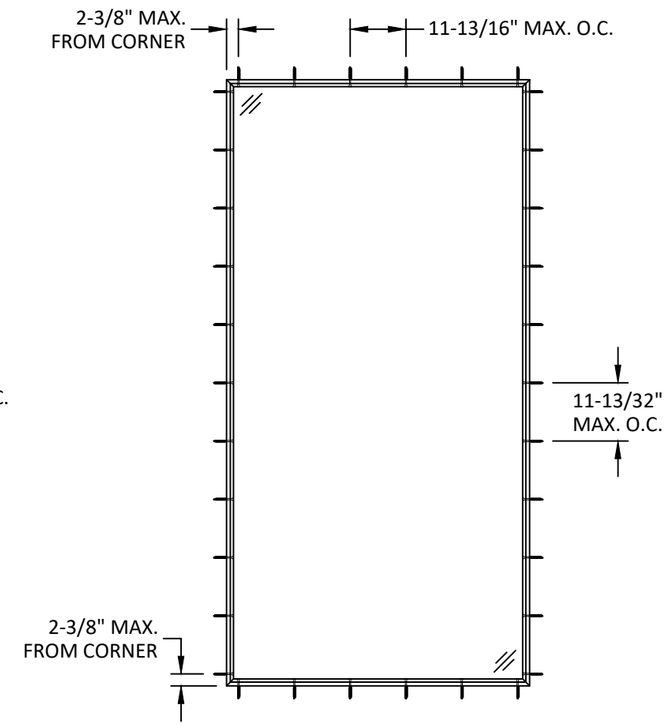

ANCHOR LAYOUT
THROUGH FRAME

D.L.O. HEIGHT = FRAME HEIGHT - 2 3/4"
D.L.O. WIDTH = FRAME WIDTH - 2 3/4"

LOEWEN WINDOWS
77 HWY 52 WEST
STEINBACH, MB R5G 1B2, CANADA
PH: (800) 563-9360

TITLE:
SERIES 36 PICTURE/DIRECT SET
STORMFORCE WINDOW
(HVHZ) (IMPACT)
TYPICAL ELEVATION AND
ANCHOR LAYOUTS

PREPARED BY:
BUILDING DROPS, INC.
1900 NE MIAMI COURT, SUITE 2-15
MIAMI, FL 33132
PH: (954) 399-8478
FAX: (954) 744-4738
WEB: www.buildingdrops.com

REMARKS	BY	DATE
A. GLASS REVISION	LS	3/31/2026
B. 2026 FBC UPDATE	LS	6/29/2026

THE INSTALLATION DETAILS DESCRIBED HEREIN ARE GENERIC AND MAY NOT REFLECT ACTUAL CONDITIONS FOR A SPECIFIC SITE. IF SITE CONDITIONS CAUSE INSTALLATION TO DEVIATE FROM THE REQUIREMENTS DETAILED HEREIN, A LICENSED ENGINEER OR ARCHITECT SHALL PREPARE SITE SPECIFIC DOCUMENTS FOR USE WITH THIS DOCUMENT.

HERMES F. NORERO
LICENSE
No. 73778
STATE OF
FLORIDA
PROFESSIONAL ENGINEER

HERMES F. NORERO, P.E.
FLORIDA P.E. No 73778
BUILDING DROPS, INC
1900 NE MIAMI COURT, SUITE 2-15
MIAMI, FL 33132
FBPE CERT. OF AUTHORIZATION No. 29578

FL #: FL30504

DATE: 11.21.2025

DWG. BY: MS

CHK. BY: HFN

SCALE: NTS

DWG. #: LOE001

SHEET: 3

REV. B

DESIGN PRESSURE CHART (PSF) - GLAZING DETAIL G1, G3, AND G4

FRAME HEIGHT (IN.)	FRAME WINDTH (IN.)																			
	36	42	48	54	60	66	72	78	84	90	96	102	108	114	120	126	132	138	144	149.625
36	55.00	55.00	55.00	55.00	55.00	55.00	55.00	55.00	55.00	55.00	55.00	55.00	55.00	55.00	55.00	55.00	55.00	55.00	55.00	55.00
42	55.00	55.00	55.00	55.00	55.00	55.00	55.00	55.00	55.00	55.00	55.00	55.00	55.00	55.00	55.00	55.00	55.00	55.00	55.00	55.00
48	55.00	55.00	55.00	55.00	55.00	55.00	55.00	55.00	55.00	55.00	55.00	55.00	55.00	55.00	55.00	55.00	55.00	55.00	55.00	55.00
54	55.00	55.00	55.00	55.00	55.00	55.00	55.00	55.00	55.00	55.00	55.00	55.00	55.00	55.00	55.00	55.00	55.00	-	-	-
60	55.00	55.00	55.00	55.00	55.00	55.00	55.00	55.00	55.00	55.00	55.00	55.00	55.00	55.00	55.00	-	-	-	-	-
66	55.00	55.00	55.00	55.00	55.00	49.78	49.78	49.78	49.78	49.78	49.78	49.78	49.78	-	-	-	-	-	-	-
72	55.00	55.00	55.00	55.00	55.00	49.78	45.47	45.47	45.47	45.47	45.47	-	-	-	-	-	-	-	-	-
78	55.00	55.00	55.00	55.00	55.00	49.78	45.47	41.84	41.84	41.84	-	-	-	-	-	-	-	-	-	-
84	55.00	55.00	55.00	55.00	55.00	49.78	45.47	41.84	38.75	-	-	-	-	-	-	-	-	-	-	-
90	55.00	55.00	55.00	55.00	55.00	49.78	45.47	41.84	-	-	-	-	-	-	-	-	-	-	-	-
96	55.00	55.00	55.00	55.00	55.00	49.78	45.47	-	-	-	-	-	-	-	-	-	-	-	-	-
102	55.00	55.00	55.00	55.00	55.00	49.78	-	-	-	-	-	-	-	-	-	-	-	-	-	-
108	55.00	55.00	55.00	55.00	55.00	49.78	-	-	-	-	-	-	-	-	-	-	-	-	-	-
114	55.00	55.00	55.00	55.00	55.00	-	-	-	-	-	-	-	-	-	-	-	-	-	-	-
120	55.00	55.00	55.00	55.00	55.00	-	-	-	-	-	-	-	-	-	-	-	-	-	-	-
126	55.00	55.00	55.00	55.00	-	-	-	-	-	-	-	-	-	-	-	-	-	-	-	-
132	55.00	55.00	55.00	55.00	-	-	-	-	-	-	-	-	-	-	-	-	-	-	-	-
138	55.00	55.00	55.00	-	-	-	-	-	-	-	-	-	-	-	-	-	-	-	-	-
144	55.00	55.00	55.00	-	-	-	-	-	-	-	-	-	-	-	-	-	-	-	-	-
149.625	55.00	55.00	55.00	-	-	-	-	-	-	-	-	-	-	-	-	-	-	-	-	-

DESIGN PRESSURE CHART (PSF) - GLAZING DETAIL G2

FRAME HEIGHT (IN.)	FRAME WINDTH (IN.)																			
	36	42	48	54	60	66	72	78	84	90	96	102	108	114	120	126	132	138	144	149.625
36	75.00	75.00	75.00	75.00	75.00	75.00	75.00	75.00	75.00	75.00	75.00	75.00	75.00	75.00	75.00	75.00	75.00	75.00	75.00	75.00
42	75.00	75.00	75.00	75.00	75.00	75.00	75.00	75.00	75.00	75.00	75.00	75.00	75.00	75.00	75.00	75.00	75.00	75.00	70.43	69.99
48	75.00	75.00	75.00	75.00	75.00	75.00	75.00	75.00	75.00	75.00	75.00	75.00	75.00	75.00	75.00	64.43	63.76	63.17	62.63	62.18
54	75.00	75.00	75.00	75.00	75.00	75.00	75.00	75.00	75.00	75.00	75.00	75.00	61.39	60.34	59.43	58.63	57.92	-	-	-
60	75.00	75.00	75.00	75.00	75.00	75.00	75.00	75.00	75.00	75.00	75.00	55.00	55.00	55.00	55.00	-	-	-	-	-
66	75.00	75.00	75.00	75.00	75.00	67.88	67.88	67.88	67.88	49.78	49.78	49.78	49.78	-	-	-	-	-	-	-
72	75.00	75.00	75.00	75.00	75.00	67.88	62.00	62.00	45.47	45.47	45.47	-	-	-	-	-	-	-	-	-
78	75.00	75.00	75.00	75.00	75.00	67.88	62.00	41.84	41.84	41.84	-	-	-	-	-	-	-	-	-	-
84	75.00	75.00	75.00	75.00	75.00	67.88	45.47	41.84	38.75	-	-	-	-	-	-	-	-	-	-	-
90	75.00	75.00	75.00	75.00	75.00	49.78	45.47	41.84	-	-	-	-	-	-	-	-	-	-	-	-
96	75.00	75.00	75.00	75.00	75.00	49.78	45.47	-	-	-	-	-	-	-	-	-	-	-	-	-
102	75.00	75.00	75.00	75.00	55.00	49.78	-	-	-	-	-	-	-	-	-	-	-	-	-	-
108	75.00	75.00	75.00	61.39	55.00	49.78	-	-	-	-	-	-	-	-	-	-	-	-	-	-
114	75.00	75.00	75.00	60.34	55.00	-	-	-	-	-	-	-	-	-	-	-	-	-	-	-
120	75.00	75.00	75.00	59.43	55.00	-	-	-	-	-	-	-	-	-	-	-	-	-	-	-
126	75.00	75.00	64.43	58.63	-	-	-	-	-	-	-	-	-	-	-	-	-	-	-	-
132	75.00	75.00	63.76	57.92	-	-	-	-	-	-	-	-	-	-	-	-	-	-	-	-
138	75.00	75.00	63.17	-	-	-	-	-	-	-	-	-	-	-	-	-	-	-	-	-
144	75.00	70.43	62.63	-	-	-	-	-	-	-	-	-	-	-	-	-	-	-	-	-
149.625	75.00	69.99	62.18	-	-	-	-	-	-	-	-	-	-	-	-	-	-	-	-	-

LOEWEN WINDOWS
77 HWY 52 WEST
STEINBACH, MB R5G 1B2, CANADA
PH: (800) 563-9360

TITLE:
SERIES 36 PICTURE/DIRECT SET STORMFORCE WINDOW (HVHZ) (IMPACT)
DESIGN PRESSURE CHARTS

PREPARED BY:
BUILDING DROPS, INC.
1900 NE MIAMI COURT, SUITE 2-15
MIAMI, FL 33132
PH: (954) 399-8478
FAX: (954) 744-4738
WEB: www.buildingdrops.com

REMARKS	BY	DATE
A. GLASS REVISION	LS	3/31/2026
B. 2026 FBC UPDATE	LS	6/29/2026

THE INSTALLATION DETAILS DESCRIBED HEREIN ARE GENERIC AND MAY NOT REFLECT ACTUAL CONDITIONS FOR A SPECIFIC SITE. IF SITE CONDITIONS CAUSE INSTALLATION TO DEVIATE FROM THE REQUIREMENTS DETAILED HEREIN, A LICENSED ENGINEER OR ARCHITECT SHALL PREPARE SITE SPECIFIC DOCUMENTS FOR USE WITH THIS DOCUMENT.

HERMES F. NORERO
LICENSE
No. 73778
STATE OF
FLORIDA
PROFESSIONAL ENGINEER

HERMES F. NORERO, P.E.
FLORIDA P.E. No 73778
BUILDING DROPS, INC
1900 NE MIAMI COURT, SUITE 2-15
MIAMI, FL 33132
FBPE CERT. OF AUTHORIZATION No. 29578

FL #: FL30504

DATE: 11.21.2025

DWG. BY: MS

CHK. BY: HFN

SCALE: NTS

DWG. #: LOE001

SHEET: 4

REV. B

7/23/2026 1:54 PM
c:\users\lucianosanchez\building drops, inc\building drops landing - documents\common\projects\2026 code change projects\loewen\cc-26-0305.1 - 2026 code change - 1711\dwgs\fl30504\loe001-a.dwg

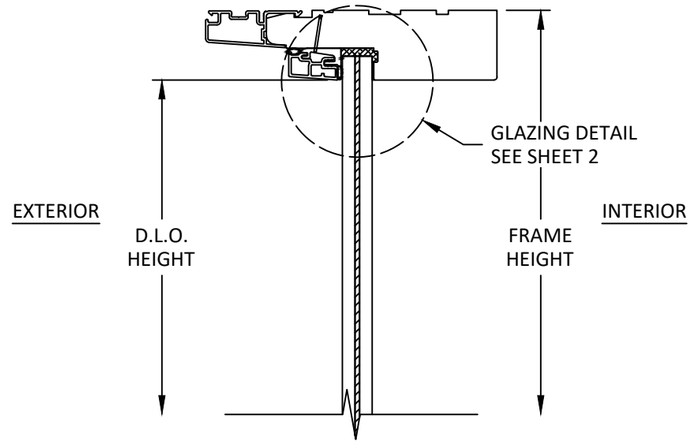

A/5 VERTICAL SECTION

HEAD
MONO. GLASS SHOWN

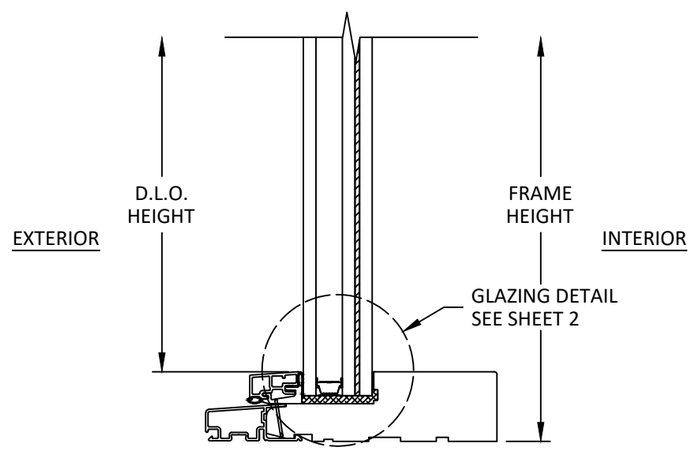

B/5 VERTICAL SECTION

SILL
INSULATED GLASS SHOWN

LOEWEN WINDOWS
77 HWY 52 WEST
STEINBACH, MB R5G 1B2, CANADA
PH: (800) 563-9360

TITLE:
SERIES 36 PICTURE/DIRECT SET
STORMFORCE WINDOW
(HVHZ) (IMPACT)
VERTICAL SECTIONS

PREPARED BY:
BUILDING DROPS, INC.
1900 NE MIAMI COURT, SUITE 2-15
MIAMI, FL 33132
PH: (954) 399-8478
FAX: (954) 744-4738
WEB: www.buildingdrops.com

REMARKS	BY	DATE
A. GLASS REVISION	LS	3/31/2026
B. 2026 FBC UPDATE	LS	6/29/2026

THE INSTALLATION DETAILS DESCRIBED HEREIN ARE GENERIC AND MAY NOT REFLECT ACTUAL CONDITIONS FOR A SPECIFIC SITE. IF SITE CONDITIONS CAUSE INSTALLATION TO DEVIATE FROM THE REQUIREMENTS DETAILED HEREIN, A LICENSED ENGINEER OR ARCHITECT SHALL PREPARE SITE SPECIFIC DOCUMENTS FOR USE WITH THIS DOCUMENT.

HERMES F. NORERO
LICENSE
No. 73778
STATE OF
FLORIDA
PROFESSIONAL ENGINEER

HERMES F. NORERO, P.E.
FLORIDA P.E. No 73778
BUILDING DROPS, INC
1900 NE MIAMI COURT, SUITE 2-15
MIAMI, FL 33132
FBPE CERT. OF AUTHORIZATION No. 29578

FL #: FL30504

DATE: 11.21.2025

DWG. BY: MS

CHK. BY: HFN

SCALE: NTS

DWG. #: LOE001

SHEET: 5

REV. B

OF 7

7/23/2026 1:54 PM
c:\users\lucianosanchez\building drops, inc\building drops landing - documents\common\projects\2026 code change projects\loewen\cc-26-0305.1 - 2026 code change - 1711\dwgs\fl30504\loe001-a.dwg

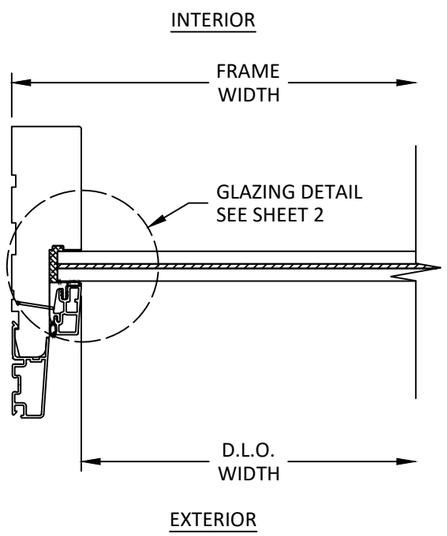

C/6 HORIZONTAL SECTION
JAMB
MONO. GLASS SHOWN

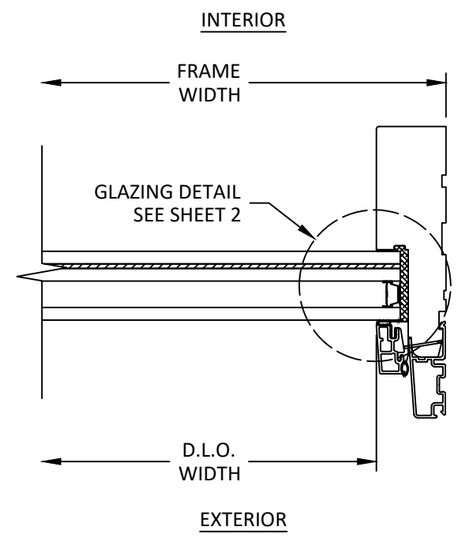

D/6 HORIZONTAL SECTION
JAMB
INSULATED GLASS SHOWN

LOEWEN WINDOWS
77 HWY 52 WEST
STEINBACH, MB R5G 1B2, CANADA
PH: (800) 563-9360

TITLE:
SERIES 36 PICTURE/DIRECT SET STORMFORCE WINDOW (HVHZ) (IMPACT)
HORIZONTAL SECTIONS

PREPARED BY:
BUILDING DROPS, INC.
1900 NE MIAMI COURT, SUITE 2-15
MIAMI, FL 33132
PH: (954) 399-8478
FAX: (954) 744-4738
WEB: www.buildingdrops.com

REMARKS	BY	DATE
A. GLASS REVISION	LS	3/31/2026
B. 2026 FBC UPDATE	LS	6/29/2026

THE INSTALLATION DETAILS DESCRIBED HEREIN ARE GENERIC AND MAY NOT REFLECT ACTUAL CONDITIONS FOR A SPECIFIC SITE. IF SITE CONDITIONS CAUSE INSTALLATION TO DEVIATE FROM THE REQUIREMENTS DETAILED HEREIN, A LICENSED ENGINEER OR ARCHITECT SHALL PREPARE SITE SPECIFIC DOCUMENTS FOR USE WITH THIS DOCUMENT.

HERMES F. NORERO
LICENSE
No. 73778
STATE OF FLORIDA
PROFESSIONAL ENGINEER

HERMES F. NORERO, P.E.
FLORIDA P.E. No 73778
BUILDING DROPS, INC
1900 NE MIAMI COURT, SUITE 2-15
MIAMI, FL 33132
FBPE CERT. OF AUTHORIZATION No. 29578

FL #: FL30504
DATE: 11.21.2025
DWG. BY: MS
CHK. BY: HFN
SCALE: NTS
DWG. #: LOE001
SHEET: 6
REV. B
OF 7

7/23/2026 1:54 PM
c:\users\lucianosanchez\building drops, inc\building drops landing - documents\common\projects\2026 code change projects\loewen\cc-26-0305.1 - 2026 code change - 1711\dwgs\fl30504\loe001-a.dwg

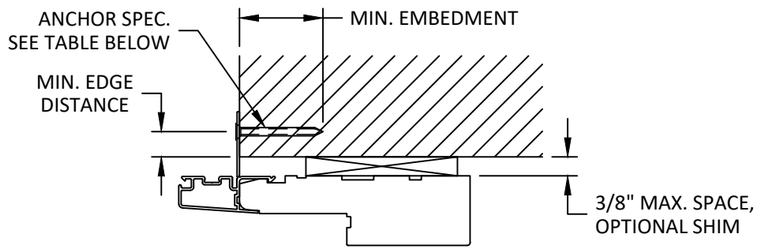

EXTERIOR INTERIOR

E/7 INSTALLATION DETAILS

NAILING FLANGE
HEAD SHOWN, JAMB & SILL SIMILAR

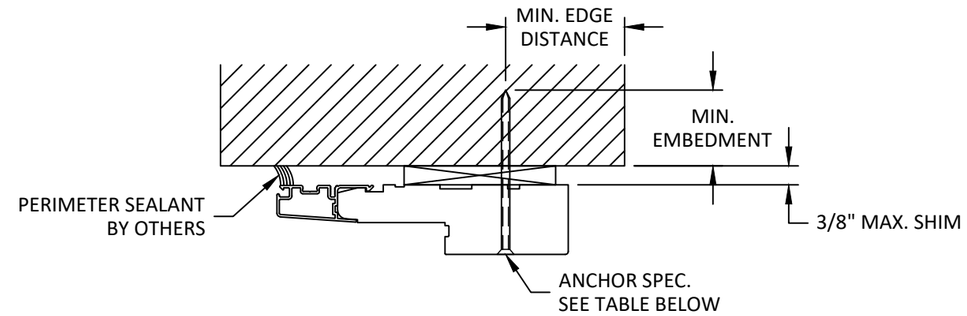

EXTERIOR INTERIOR

F/7 INSTALLATION DETAILS

THROUGH FRAME
HEAD SHOWN, JAMB & SILL SIMILAR

INSTALLATION NOTES:

1. ONE (1) INSTALLATION ANCHORS ARE REQUIRED AT EACH ANCHOR LOCATION.
2. THE NUMBER OF INSTALLATION ANCHORS DEPICTED IS THE MINIMUM NUMBER OF ANCHORS TO BE USED FOR PRODUCT INSTALLATION OF THE MAXIMUM SIZE LISTED.
3. INSTALL INDIVIDUAL INSTALLATION ANCHORS WITHIN A TOLERANCE OF ±1/4 INCH THE DEPICTED LOCATION & SPACING IN THE ANCHOR LAYOUT DETAILS (I.E., WITHOUT CONSIDERATION OF TOLERANCES). TOLERANCES ARE NOT CUMULATIVE FROM ONE INSTALLATION ANCHOR TO THE NEXT.
4. SHIM AS REQUIRED AT EACH INSTALLATION ANCHOR WITH LOAD BEARING SHIM(S). MAXIMUM ALLOWABLE SHIM STACK TO BE 3/8 INCH. SHIM WHERE SPACE OF 1/16 INCH OR GREATER OCCURS. SHIM(S) SHALL BE CONSTRUCTED OF HIGH DENSITY PLASTIC OR BETTER.
5. FOR MASONRY OR CONCRETE OPENINGS, A 1X WOOD BUCK MAY BE USED (OPTIONAL) AS LONG AS THE MINIMUM EMBEDMENT AND EDGE DISTANCE REQUIREMENTS ARE STILL MET WITHIN THE CORRESPONDING HOST SUBSTRATE. SEE GENERAL NOTE #3 ON SHEET 1 FOR MORE INFORMATION.
6. MINIMUM EMBEDMENT AND EDGE DISTANCE EXCLUDE WALL FINISHES, INCLUDING BUT NOT LIMITED TO STUCCO, FOAM, BRICK VENEER, AND SIDING.
7. INSTALLATION ANCHORS AND ASSOCIATED HARDWARE MUST BE MADE OF CORROSION RESISTANT MATERIAL OR HAVE A CORROSION RESISTANT COATING:
   - FASTENERS USED WITHIN 3,000 FEET OF A SALTWATER COASTLINE AND INSTALLED IN ENCLOSED SPACES SHALL BE GALVANIZED IN ACCORDANCE WITH SECTION 1711.1.1 (E.G., ASTM A153 CLASS D, ASTM A641 CLASS 3S, OR EQUIVALENT CORROSION RESISTANCE).
   - CONNECTORS AND METAL PLATES USED WITHIN 3,000 FEET OF A SALTWATER COASTLINE SHALL BE STANDARD GALVANIZED IN ACCORDANCE WITH SECTION 1711.1.2 (E.G., ASTM A653 G90, ASTM A123, OR PROTECTIVE COATING PER TPI 1).
8. FOR HOLLOW BLOCK AND GROUT FILLED BLOCK, DO NOT INSTALL INSTALLATION ANCHORS INTO MORTAR JOINTS. EDGE DISTANCE IS MEASURED FROM FREE EDGE OF BLOCK OR EDGE OF MORTAR JOINT INTO FACE SHELL OF BLOCK.
9. INSTALLATION ANCHORS SHALL BE INSTALLED IN ACCORDANCE WITH ANCHOR MANUFACTURER'S INSTALLATION INSTRUCTIONS AND ANCHORS SHALL NOT BE USED IN SUBSTRATES WITH STRENGTHS LESS THAN THE MINIMUM STRENGTH SPECIFIED BY THE ANCHOR MANUFACTURER.

ANCHOR SCHEDULE

ANCHOR METHOD	SUBSTRATE	ANCHOR TYPE	MIN. EMBEDMENT	MIN. EDGE DISTANCE
NAILING FLANGE	WOOD: MIN. S.G. = 0.55	10 GAUGE NAIL (CARBON STEEL)	1-1/2"	1/2"
		10 GAUGE NAIL (STAINLESS STEEL)	2-1/2"	1/2"
	STEEL: MIN. 18 GA. MIN. Fy = 33 ksi	#6 GRADE 5 SELF-DRILLING/ SELF-TAPPING SCREW	3 THREADS MIN PENETRATION BEYOND METAL	1/2"
	ALUMINUM: MIN. 1/8" THICK MIN. 6063-T5			
THROUGH FRAME	WOOD: MIN. S.G. = 0.55	#10 WOOD SCREW	1-1/2"	1"
	STEEL: MIN. 18 GA. MIN. Fy = 33 ksi	#10 GRADE 5 SELF-DRILLING/ SELF-TAPPING SCREW	3 THREADS MIN PENETRATION BEYOND METAL	1/2"
	ALUMINUM: MIN. 1/8" THICK MIN. 6063-T5			
	CONCRETE: MIN. f'c = 3000 psi	3/16" ITW TAPCON	1"	1-1/8"
	MASONRY: HOLLOW OR GROUT-FILLED BLOCK per ASTM C90, MIN. 2000 PSI	3/16" ITW TAPCON	1"	2"

LOEWEN WINDOWS
77 HWY 52 WEST
STEINBACH, MB R5G 1B2, CANADA
PH: (800) 563-9360

TITLE: SERIES 36 PICTURE/DIRECT SET STORMFORCE WINDOW (HVHZ) (IMPACT)
INSTALLATION DETAILS & NOTES

PREPARED BY: BUILDING DROPS, INC.
1900 NE MIAMI COURT, SUITE 2-15
MIAMI, FL 33132
PH: (954) 399-8478
FAX: (954) 744-4738
WEB: www.buildingdrops.com

REMARKS	BY	DATE
A. GLASS REVISION	LS	3/31/2026
B. 2026 FBC UPDATE	LS	6/29/2026

THE INSTALLATION DETAILS DESCRIBED HEREIN ARE GENERIC AND MAY NOT REFLECT ACTUAL CONDITIONS FOR A SPECIFIC SITE. IF SITE CONDITIONS CAUSE INSTALLATION TO DEVIATE FROM THE REQUIREMENTS DETAILED HEREIN, A LICENSED ENGINEER OR ARCHITECT SHALL PREPARE SITE SPECIFIC DOCUMENTS FOR USE WITH THIS DOCUMENT.

HERMES F. NORERO
LICENSE
No. 73778
STATE OF
FLORIDA
PROFESSIONAL ENGINEER

HERMES F. NORERO, P.E.
FLORIDA P.E. No 73778
BUILDING DROPS, INC
1900 NE MIAMI COURT, SUITE 2-15
MIAMI, FL 33132
FBPE CERT. OF AUTHORIZATION No. 29578

FL #: FL30504
DATE: 11.21.2025
DWG. BY: MS
CHK. BY: HFN
SCALE: NTS
DWG. #: LOE001
SHEET: 7 OF 7
REV. B

7/23/2026 1:54 PM
c:\users\lucianosanchez\building drops, inc\building drops landing - documents\common\projects\2026 code change projects\loewen\cc-26-0305.1 - 2026 code change - 1711\dwgs\fl30504\loe001-a.dwg